P:\5837\5837.08_EB Gameworld\Arch\583708A1.0.dwg, 06/16/2004 03:52:35 PM, droush

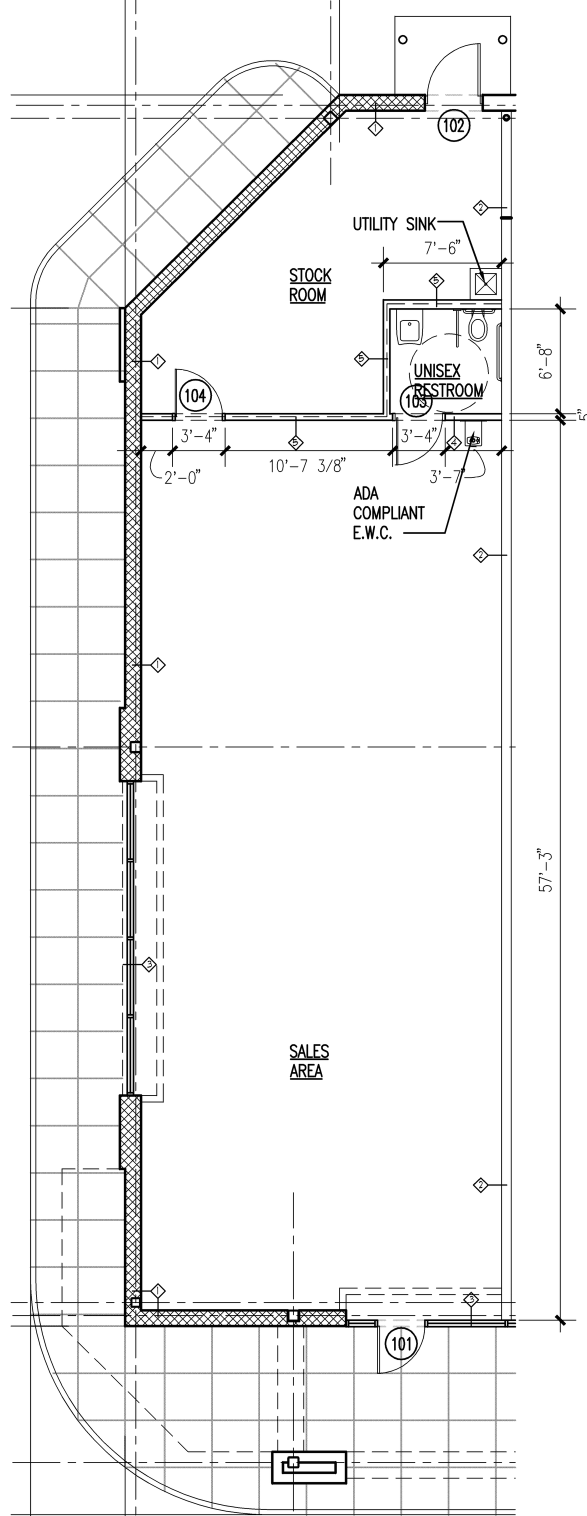

1 FLOOR PLAN A1.0 SCALE: 1/8" = 1'-0"

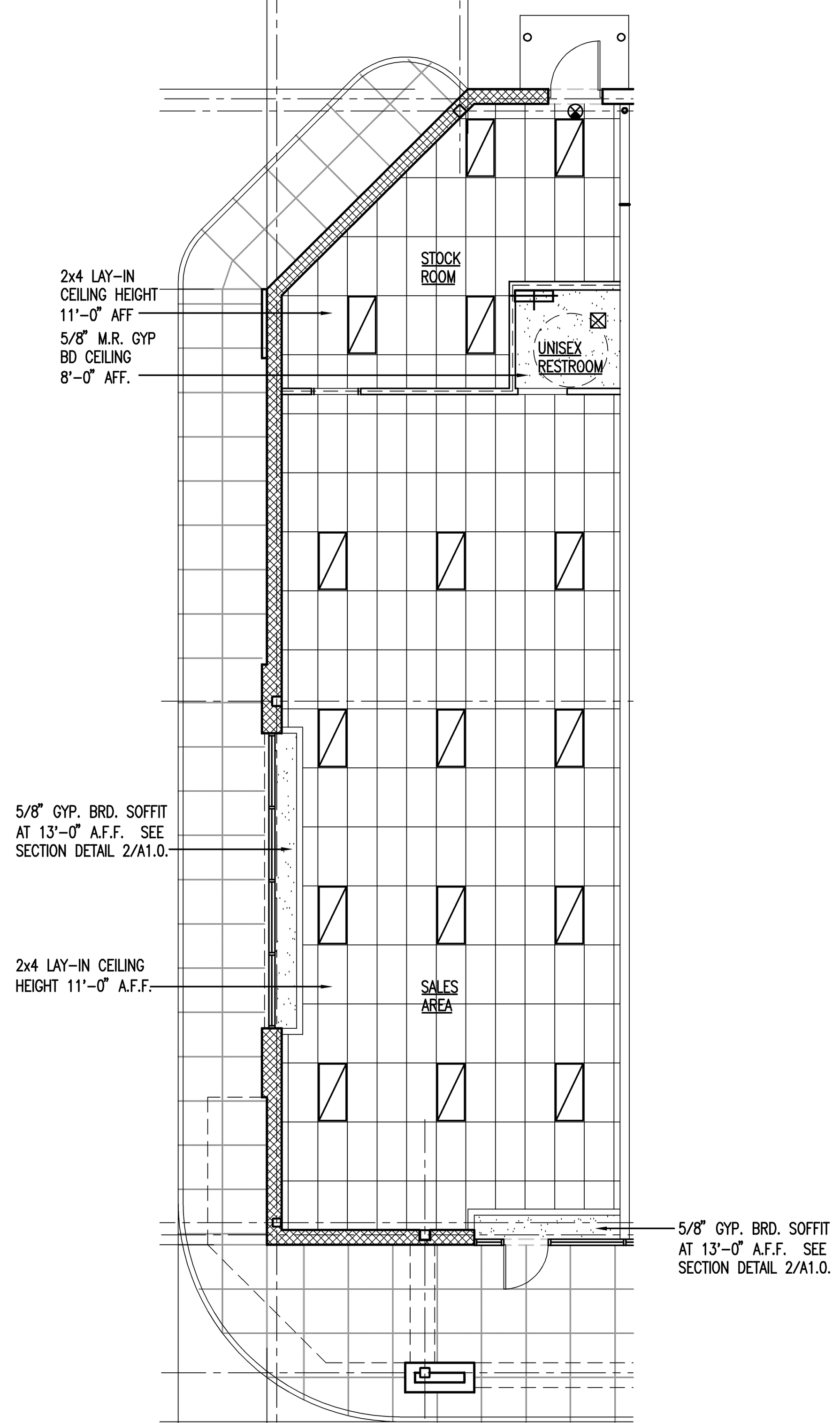

2 REFLECTED CEILING PLAN A1.0 SCALE: 1/8" = 1'-0"

GENERAL NOTES:

1. ALL GYP BOARD SURFACES SHALL BE TAPED, MUDDED, SANDED AND PREPARED FOR PAINT FINISH BY TENANT CONTRACTOR.
2. SUSPENDED ACOUSTICAL LAY-IN CEILING WITH EXPOSED TEE GRID FRAMING MAIN TEE AT 4'-0" ON CENTER. REFER TO TENANT PLAN FINISH SCHEDULE FOR TYPE AND STYLE AS PER SHELL SPECIFICATIONS.
3. WALL AND FLOOR FINISHES SHALL BE BY TENANT'S G.C.

WALL TYPES

1 EXISTING MASONRY	EXISTING 12" PAINTED SPLIT FACE CONC. BLOCK WALL. 5/8" GYP. BOARD ON 7/8" METAL "Z" FURRING WITH RIGID INSULATION. TAPE, MUD, SAND AND PREP FOR PAINTING BY TENANT CONTRACTOR.
2 EXISTING DEMISE WALL	EXISTING TENANT DEMISING WALL – 5/8" FIRE CODE GYP BOARD BOTH SIDES OF MIN. 6" 20 GA. GALVANIZED METAL STUDS – 16" O.C. FULL HEIGHT TO ROOF DECK. PREP TO RECEIVE PAINT BY TENANT CONTRACTOR.
3 EXISTING STOREFRONT	EXISTING WHITE ANODIZED ALUMINUM STOREFRONT SYSTEM WITH 1-3/4" X 4'-1/2" FRAMING MEMBERS AND 1" INSULATED GLASS UNLESS OTHERWISE NOTED.
4 PARTITION WALLS	NEW 5/8" GYP. BOARD BOTH SIDES OF 3 5/8" 20GA. METAL STUDS FRAMED @ 16" O.C. TO BE MUDDED, SANDED, AND PREPPED TO RECEIVE PAINT BY LANDLORD CONTRACTOR. RESTROOM WALLS TO BE FURNISHED WITH MOISTURE RESISTANT GYP. BOARD. WALL DIVIDING SALES AREA AND BACK ROOM SHALL EXTEND TO UNDERSIDE OF ROOF DECK.
5 RATED PARTITION WALLS	NEW TYPE "X" 5/8" GYP. BOARD BOTH SIDES OF 3 5/8" 20GA. METAL STUDS FRAMED @ 16" O.C. TO BE MUDDED, SANDED, AND PREPPED TO RECEIVE PAINT BY TENANT CONTRACTOR. RESTROOM WALLS TO BE FURNISHED WITH MOISTURE RESISTANT GYP. BOARD. WALL DIVIDING SALES AREA AND BACK ROOM SHALL EXTEND TO UNDERSIDE OF ROOF DECK.

PLUMBING FIXTURE SCHEDULE

(A) WATER CLOSET
Cadet Elongated water Saver Toilet #2109.408 by American Standard
Vitreous China. Color to be selected by Client.
with Olsonite #44 Closed Front Seat with cover.

(B) LAVATORY
Wall Hung Lavatory #9141.011 by American Standard
Vitreous China. Color to be selected by Client.
with #7723.018 Drain Assembly. Provide w/ pipe wrap assembly.

(C) FAUCET SET
Heritage combination lavatory faucet #2238.582
by American Standard with Aquaseal valves.
Renewable seals. Chrome finish.

(D) PAPER TOWEL DISPENSOR
B-3944 Classic Series Recessed Paper Towel Dispensor
/Waste receptacle. Satin-finish stainless steel by Bobrick.

(E) TOILET PAPER HOLDER
B-264 Single Roll Toilet Paper Dispenser
Stainless steel finish by Bobrick.

(F) MIRROR
B-294 Senes Tiling Mirror 16"x36" by Bobrick.

(H) GRAB BARS
Bobrick #B490 w/268 anchor plts
1. 42" long 1 1/2" dia.
2. 24" long 1 1/2" dia.
3. 29" long 1 1/4" dia. swing up.

(I) Mop Sink
'Durabase' 24X24X12 Floor Mounted Fiberglass Sink.
Provide Wall Mounted Faucet #830-AA With Vacuume Breaker and Anti Siphon Valve.

* ALL PLUMBING FIXTURES, LINES AND ACCESSORIES TO BE ADA COMPLIANT. SUBMIT SPECIFICATION CUTS TO ARCHITECT FOR APPROVAL PRIOR TO PURCHASE OF MATERIALS.

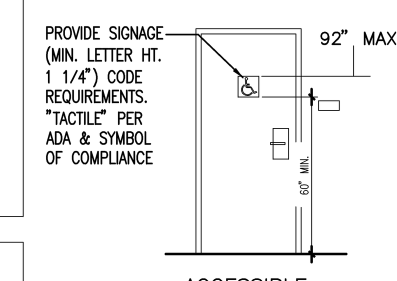

ACCESSIBLE TOILET ROOM DOOR

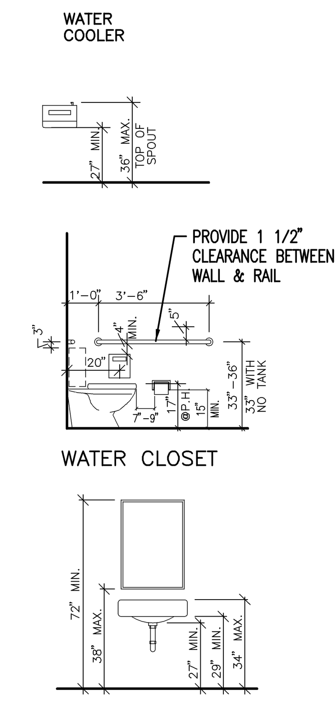

STANDARD MOUNTING HEIGHTS (FOR REFERENCE)
NO SCALE

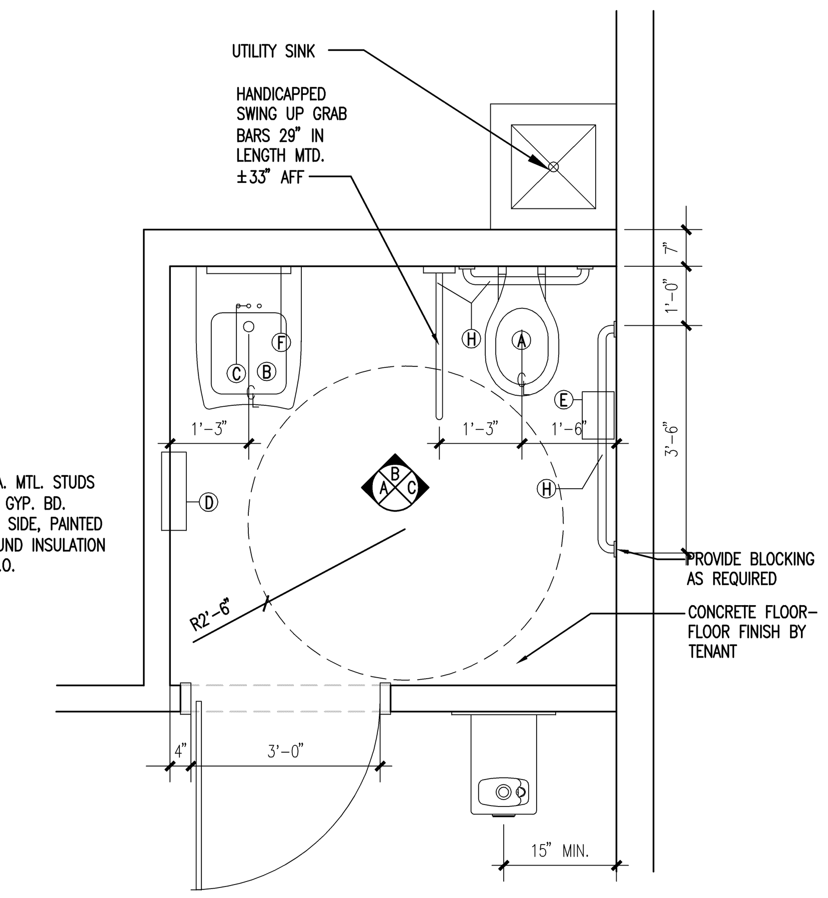

1 ENLARGED PLAN @ HC TOILET A1.0 SCALE: 1/2" = 1'-0"

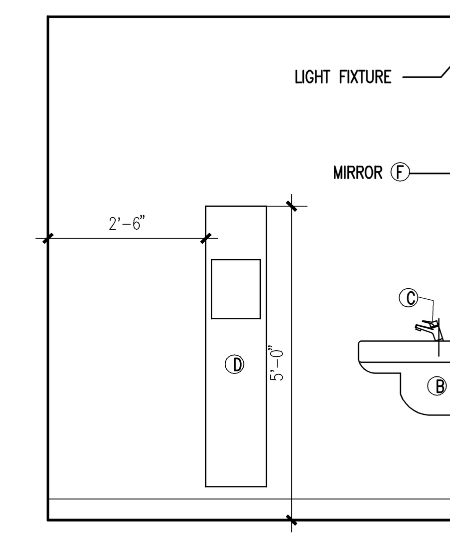

A ELEVATION @ HC TOILET A1.0 SCALE: 1/2" = 1'-0"

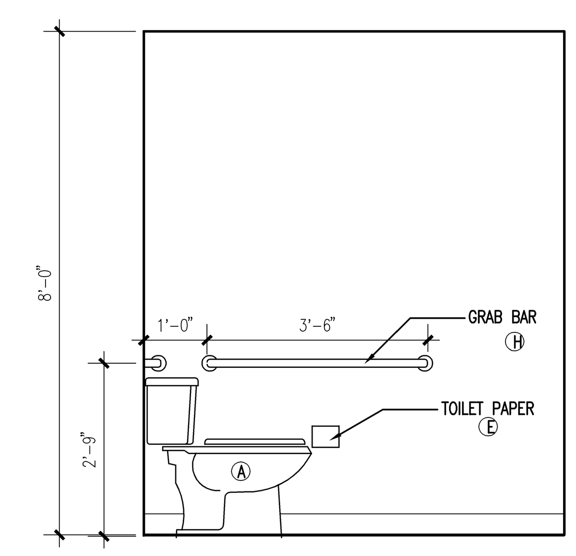

C ELEVATION @ HC TOILET A1.0 SCALE: 1/2" = 1'-0"

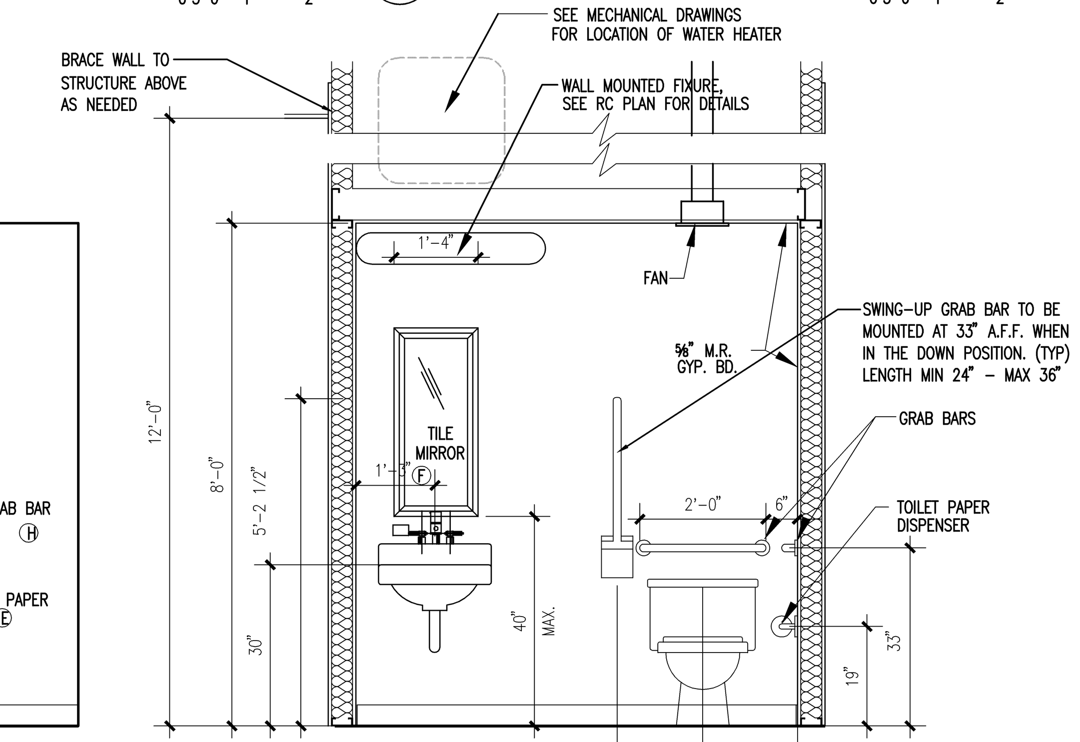

B ELEVATION @ HC TOILET A1.0 SCALE: 1/2" = 1'-0"

NOTICE

THIS ARCHITECTURAL AND ENGINEERING DRAWING IS GIVEN IN CONFIDENCE. NO USE OR DISSEMINATION MAY BE MADE WITHOUT PRIOR WRITTEN CONSENT OF THE ARCHITECT. ALL RIGHTS ARE HEREBY SPECIFICALLY RESERVED.

RICHARD L. BOWEN AND ASSOCIATES INC. COPYRIGHT YEAR 2003

DOOR SCHEDULE

MARK	DOOR SIZE W. X H. X TH.	DOOR TYPE	DOOR MATERIAL	FRAME TYPE	FRAME MATERIAL	LABEL	DETAILS HEAD	DETAILS JAMB	DETAILS SILL	HDWR GROUP	REMARKS
101	PAIR 3'-0" X 8'-0" X 1-3/4"	A	ALUM/GLASS	4/A-5	ALUM	NON-RATED	STOREFRONT	STOREFRONT	S1 (SIM)	1	EXISTING DOOR AND HARDWARE TO REMAIN/ VERIFY HARDWARE AND OPERATION
102	3'-4" X 7'-0" X 1-3/4"	C	HM	1	HM	NON-RATED	H-2	J-3	S1	2	*
103	3'-0" X 7'-0" X 1-3/4"	B	WD	2	HM	NON-RATED	H-1	J-1	NA	3	1" UNDERCUT
104	3'-0" X 7'-0" X 1-3/4"	B	WD	2	HM	45 MIN.	H-1	J-1	NA	4	–

* EXISTING DOOR AND HARDWARE – SEE HARDWARE SCHEDULE FOR ADDITIONAL HARDWARE REQUIREMENTS

DOOR HARDWARE SCHEDULE

NOTE: RATING REQUIREMENTS AS INDICATED ON DOOR SCHEDULE

HDWR GROUP	HARDWARE: TYPICAL HARDWARE SETS ARE AS FOLLOWS:	
1	1-1/2	PAIR BUTTS
	1	LOCKSET
	1	THRESHOLD
	1	WEATHERSTRIPPING AND DOOR SILENCERS
	1	DOOR STOP
	1	CLOSER
	1	COORDINATOR (DOUBLE DOORS)
	1	ASTRAGAL (DOUBLE DOORS)
	1	EXTENSION FLUSH BOLT (DOUBLE DOORS)
2	1-1/2	PAIR BUTTS
	1	PREP FOR PANIC HARDWARE
	*1	DETEX MODEL ECL-230D
	1	THRESHOLD
	1	WEATHERSTRIPPING AND DOOR SILENCERS
	1	CLOSER
3	1-1/2	PAIR BUTTS
	1	PRIVACY LOCKSET
	1	DOOR STOP
	1	CLOSER
	1	SIGNAGE AS REQUIRED BY ADA
4	1-1/2	PAIR BUTTS
	1	PUSH/ PULL HARDWARE
	1	DOOR STOP
	1	CLOSER
	1	10" HIGH KICK PLATE

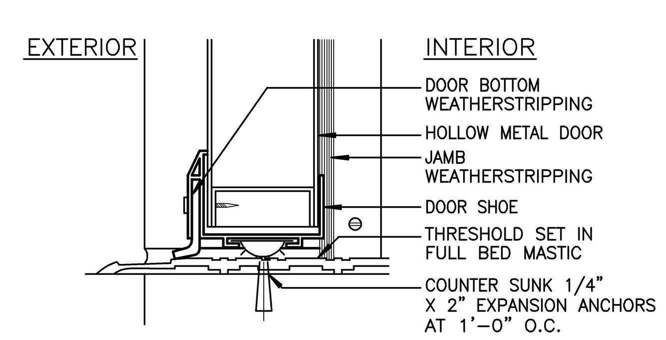

THRESHOLD DETAIL – S1 (EXISTING)
3" = 1'-0"

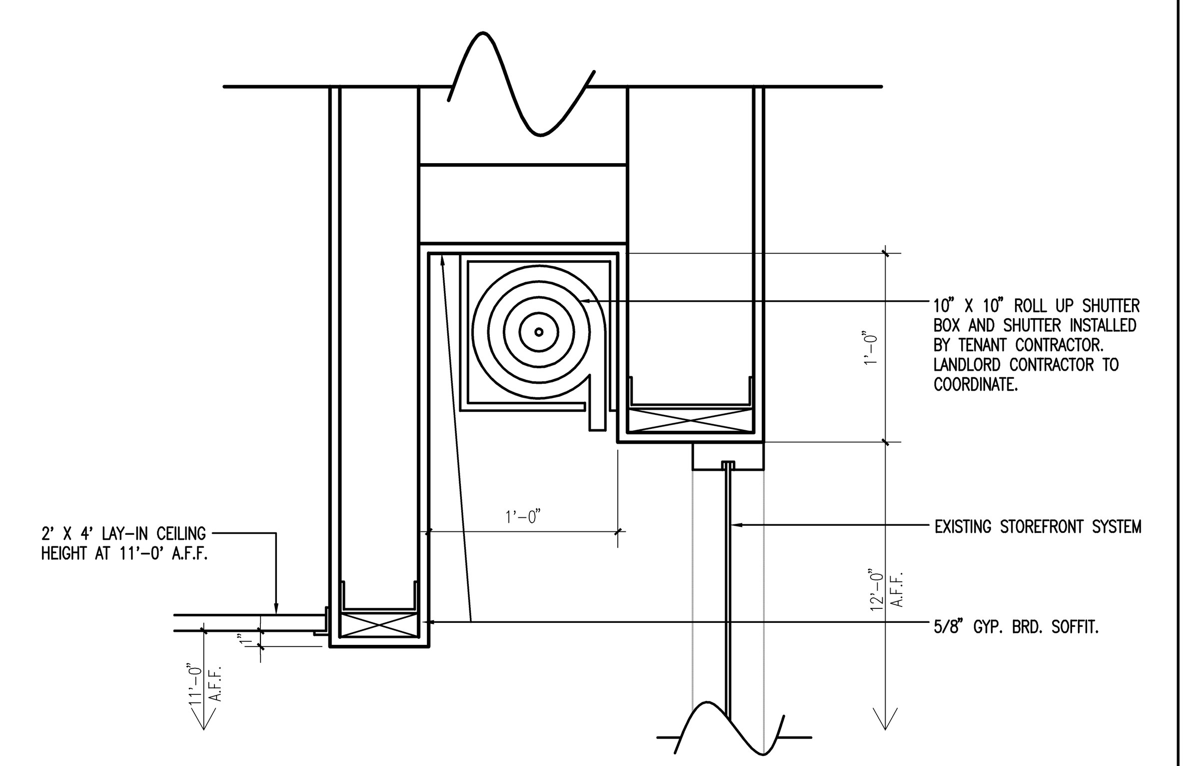

2 SECTION AT STOREFRONT SOFFIT (TYP) A1.0 1 1/2" = 1'-0"

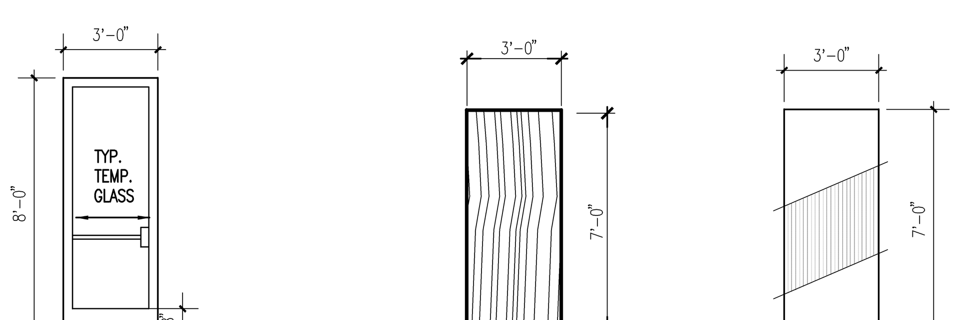

TYPE – A
"KAWNEER" MEDIUM STILE 350 STOREFRONT ENTRANCE DOORS W/ TRIBAB II 451 FRAMING SYSTEM SEE WINDOW DETAILS FOR FRAMING OF STOREFRONT ENTRANCES (OR APPROVED EQUAL)

TYPE – B
SOLID CORE WD DOOR W/ FRAME & TMM STAINABLE QUALITY U.N.O.

TYPE – C
PAINTED 18 GA. H.M. DOORS INSULATED AT EXTERIOR LOCATIONS.

DOOR TYPES NOTE: RATINGS AS INDICATED ON DOOR SCHEDULE
SCALE : 1/4" = 1'-0"

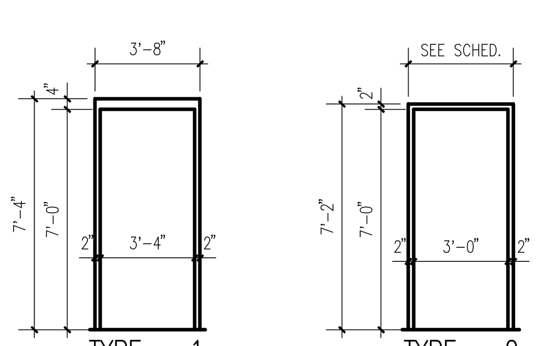

TYPE – 1
EXISTING H.M. FRAME

TYPE – 2
H.M. FRAME

FRAME TYPES NOTE: RATINGS AS INDICATED ON DOOR SCHEDULE
N.T.S.

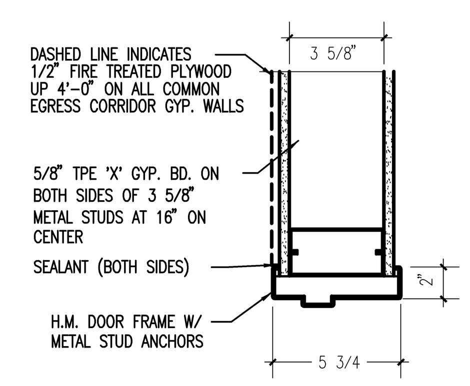

HEAD / JAMB DETAIL – HJ1
1 1/2" = 1'-0"

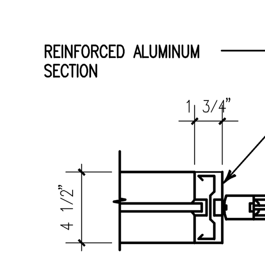

JAMB DETAIL – J2 (EXISTING)
1 1/2" = 1'-0"

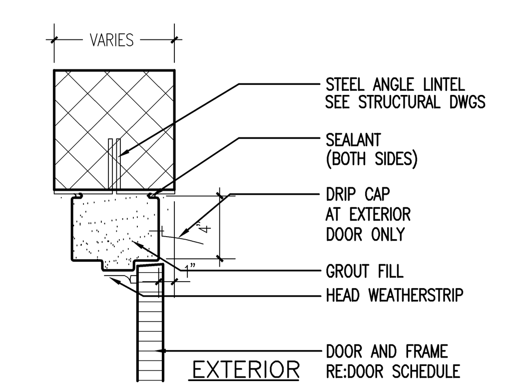

HEAD DETAIL – H2 (EXISTING)
1 1/2" = 1'-0"

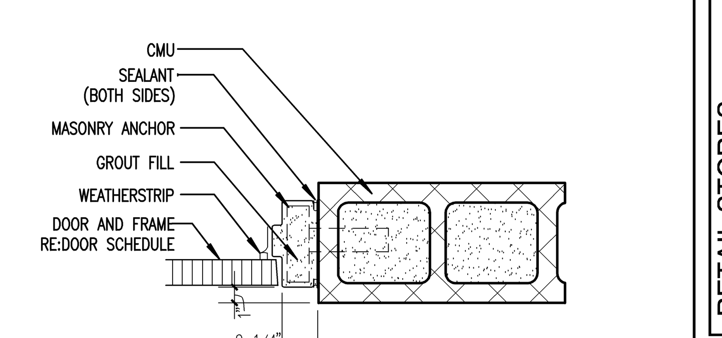

JAMB DETAIL – J3 (EXISTING)
1 1/2" = 1'-0"

DATES AND REVISIONS
06/07/04 PERMIT
06/16/04 PERMIT

RICHARD L. BOWEN AND ASSOCIATES INC.
ARCHITECTS PLANNERS ENGINEERS
13000 SHAKER BOULEVARD, CLEVELAND, OHIO 44120 · (216) 491-9300 · FAX 491-8053

RETAIL STORES
NORTH HAVEN SHOPPING CENTER - EB Games
2 UNIVERSAL DRIVE NORTH
NORTH HAVEN, CONNECTICUT

NATIONAL REALTY AND DEVELOPMENT CO.
3 MANHATTANVILLE ROAD
PURCHASE, NEW YORK 10577-2116
PHONE: (914) 694-4444 / FAX: (914) 694-5448

DRAWN BY:	SDR
CHECKED BY:	DLR
RLB NO.	5837.08

DRAWING NO.
A1.0